Freeze start Simulation and optimization of a fuel cell stack

Institut für Verbrennungskraftmaschinen
und Brennstoffzellen

Description

The objective of this thesis is to enhance the efficiency of a fuel cell system during cold starts while keeping industrial considerations in mind. This undertaking requires a deep grasp of the fuel cell's behavior in such scenarios and the creation of plans to counteract potential substantial degradation. The initial stage encompasses evaluating and illustrating the dynamic necessities of the fuel cell stack during freeze-start. With an understanding of the system's behavior, the ensuing phase zeroes in on pinpointing the most efficient operational parameters for the system in cold start situations. The overarching aim of the thesis is to ensure the fuel cell system's optimal performance during cold starts.

Your responsibilities

- Literature research
- System simulation on freeze start strategies
- Investigate and analyze the behavior of the fuel cell stack during freeze starts using the developed model.
- Propose a well-controlled freeze start strategy to minimize ice formation and water build-up in electrode layers.

Prerequisites

- An innovative mindset to explore new ideas and technologies
- Basic knowledge of electrochemical systems
- Experience with modeling and simulation techniques
- Very good knowledge of English, both written and spoken

Die TU Braunschweig strebt in allen Bereichen und Positionen an, eine Unterrepräsentanz im Sinne des NGG abzubauen. Daher sind Bewerbungen von Frauen besonders erwünscht und können nach Maßgabe des §11 NGG bevorzugt berücksichtigt werden. Schwerbehinderte werden bei gleicher Eignung bevorzugt. Ein Nachweis ist beizufügen. Zu Zwecken der Durchführung des Bewerbungsverfahrens werden personenbezogene Daten gespeichert.

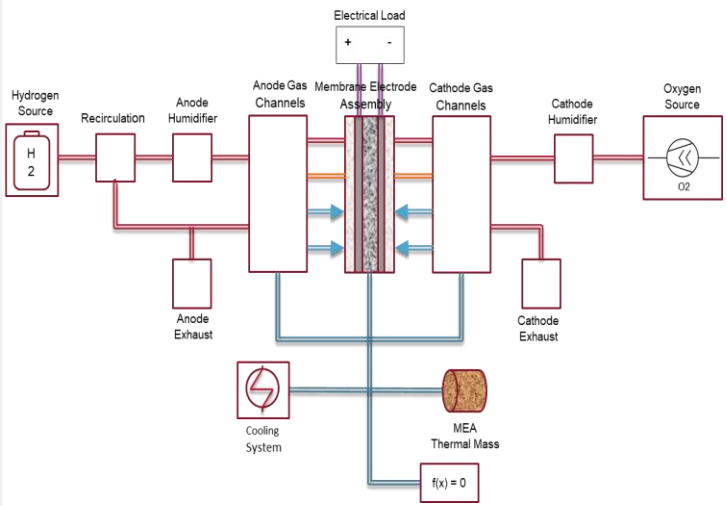

Starting: **As soon as possible**

Contact

Sunil Kumar, M. Eng.
Research Associate

Hermann-Blenk-Str. 42
Room: 110
Telefon: +49 531 / 391 66912
Mail: sunil.kumar@tu-braunschweig.de

- ☒ Bachelor Thesis
- ☒ Student Thesis
- ☒ Master Thesis
- ☒ theoretical
- ☒ simulative
- ☐ experimental

Technische Universität Braunschweig